hansgrohe

AXOR Citterio
Kitchen Faucet Select 2-Spray Pull-Out, 1.75 GPM
Finish: **brushed black chrome** Part no. : **39863341**

Description

Features

- Swivel range 110° / 150°
- Laminar spray, needle spray, Shower spray pattern
- Toggle spray diverter
- Select button provides convenient start/stop of the water flow at the sprayhead
- MagFit magnetic sprayhead docking
- Deck mounted
- Max. flow: 1.75 GPM (6.6 L/Min)
- Ceramic cartridge
- 3/8" connections
- Integrated double backflow prevention
- Extension length up to 19 5/8” (50cm)
- Single lever kitchen mixer, connection hoses, Fastening set, Assembly instructions

Item details

List Price $ 1,487.00

Technology

EcoRight · Quick Clean · Mag Fit · Comfort Zone · Pull-out · Select

Compliance / Sustainability

MAP · ADA · UPC

Product image
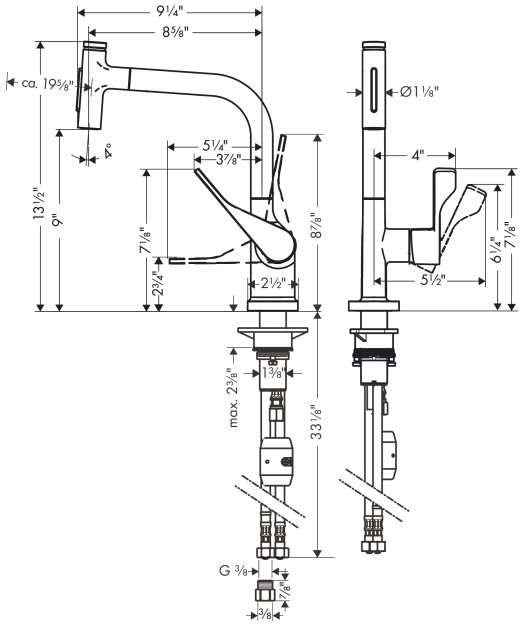
Scale drawing