hansgrohe

AXOR Edge
Freestanding Tub Filler Trim with 1.75 GPM Handshower
Finish: **polished gold optic** Part no. : **46440991**

Description

Item details

List Price	$ 5,650.00

Compliance / Sustainability

Product image
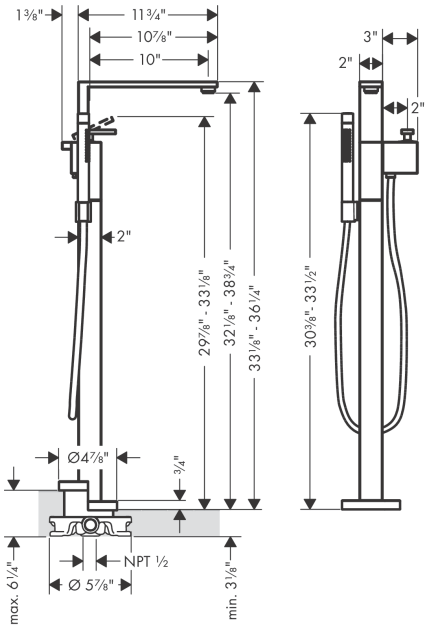
Scale drawing