California Faucets®

Descanso®

Hot Only Water Dispenser

9625-K30-FL
9625-K30-KL
9625-K30-SL

Features

- *Available in 27 finishes including 12 PVD finishes*
- *All brass construction*
- *Insulated spout to reduce heat to faucet*
- *Max flow rate: 1.0 gpm (3.8 L /min)*
- ***Not** compatible with RO filter unit*
- *Requires Hot Water Tank (9628SS) sold separately*

9625-K30-KL shown

Codes/Standards Applicable

Product meets or exceeds the following:

- *ASME A112.18.1/CSA B125.1*
- *NSF 61 and NSF 372*
- *CEC / DOE*
- *Commonwealth of MA*
- *ADA Compliant*

ICC ES c PMG

XX = Denotes Handle Style

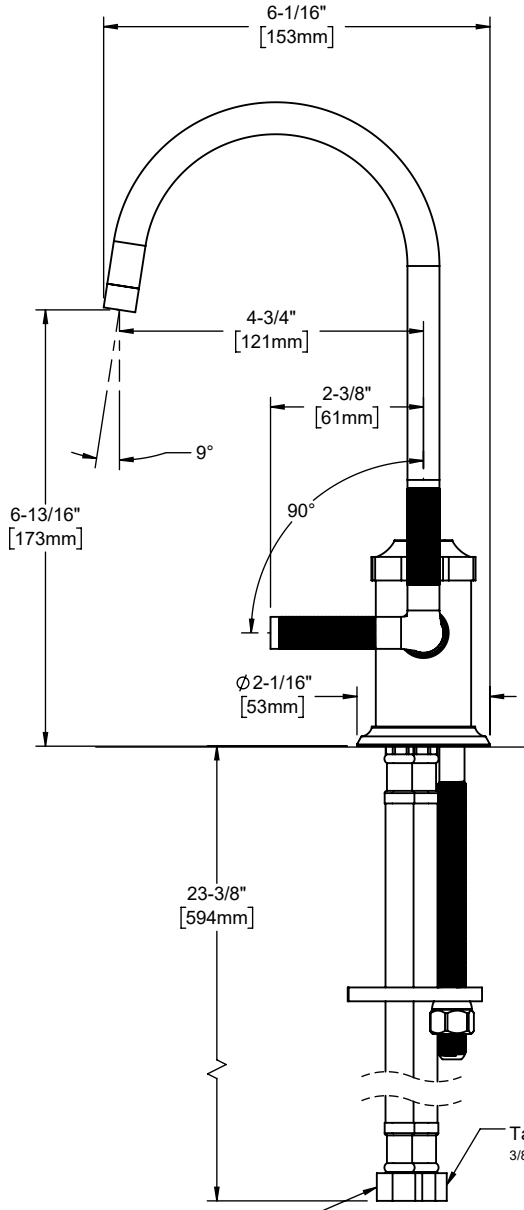

Through-Hole Specifications		
Min	Recommended	Max
∅1-1/4" [32]	∅1-3/8" [35]	∅1-1/2" [38]

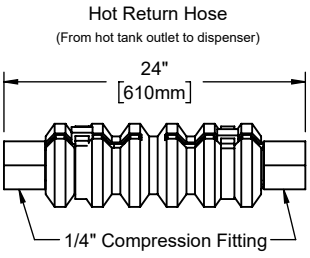

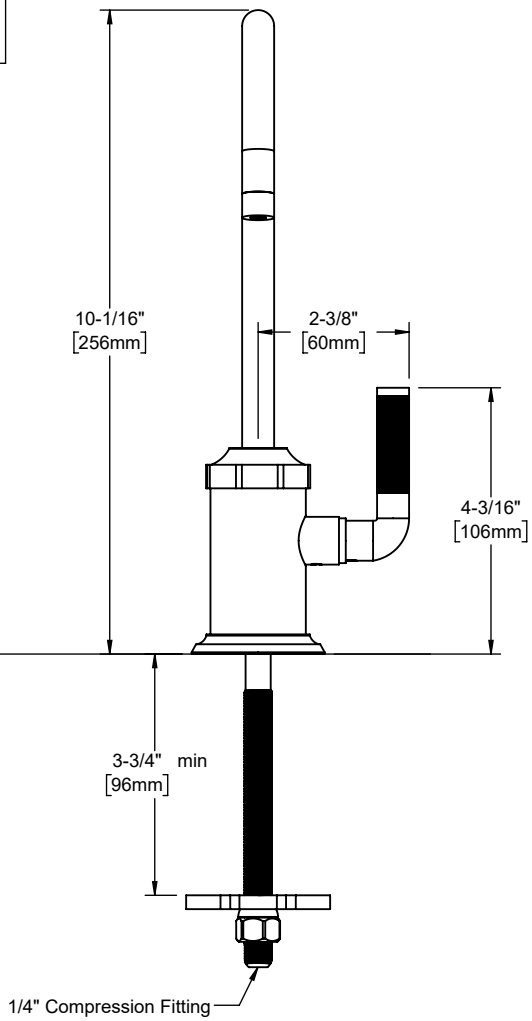

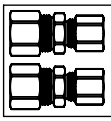

Couplings are to be used on hot tank
1 @ 1/4" Tank outlet to hot return hose
1 @ 3/8" Tank inlet to tank inlet hose

Supply line flow restrictor for 3/8" compression fitting 9/16"-24 male x female

Dimensions are inches, rounded to 1/16"
[Dimensions in brackets are mm, rounded to 1mm]

Specifications subject to change without notice