AD442112

Chimney

AD442112

- Length: 24 13/32"
- Length: 24 13/32"

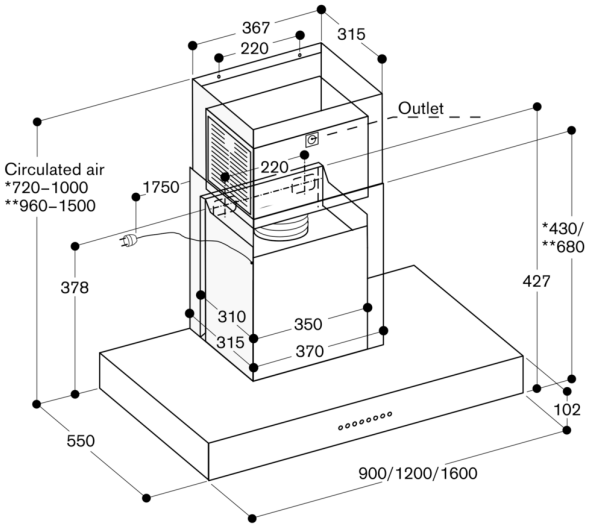

* With air recirculation duct cover AD 442 112 suitable for ceiling heights from 2.35 m to 2.60 m.

** With air recirculation duct cover AD 442 122 suitable for ceiling heights from 2.60 m to 3.10 m; measurements refer to a 1.60 m distance between floor and lower chimney edge.