Electronic Flush Valves & Retrofit Kits

Hardwire flush valve for 1-1/2" top spud WATER CLOSET with H2Optics® SENSOR ON VALVE - maximum 11-1/2" height (c/l of inlet to base of outlet)

Model No: 81T201HWA-42-MMO-BL

COMPLIES WITH:

- IAPMO listed to ASSE 1037/ ASME A112.1037/ CSA B125.37
- ♿ Indicates compliance to ICC / ANSI A117.1
- Patented
- (Contact Delta Representative for State and/or Local Approvals)

SPECIFICATION:

- Polished chrome plated vandal resistant metal cover with top mounted sensor operated H2Optics® electronics
- True mechanical manual override button
- Right or left-hand supply installation
- ADA compliant, automatic operation hardwire powered infrared sensor
- Scratch resistant replaceable lens window
- Supplied with an advanced infrared sensor activated flush system that uses precise user distance measurements along with a bowl length setting to activate the correct flush for each usage
- Hardwire adaptor 24VAC to 6VDC converter (supplied)
- Vandal resistant copper tube conduit
- Optional 24 hour automatic flush factory set to off
- Set-up sensor range adjustment indicator lights
- 24 VAC input, 6 second arming delay
- Electronic operated non-hold-open metal override button with 5 second lockout
- (110 to 24 VAC Transformer not included. See selection below for additional part number.)
- Quiet action, TECK® exposed diaphragm flush valve
- Chloramine resistant diaphragm
- Brass diaphragm retainer
- Renewable seat
- External water conserving
- Matte Black w/Chrome Finish (BL)
- Factory Set to 4.2L (1.1 Gal.) - NOT FIELD ADJUSTABLE - RECOMMENDED FOR NEW CONSTRUCTION ONLY

OPERATION:

- **Recommended water supply:**
  Minimum flowing pressure – 25 psi (172 kPa)
  Minimum flow rate – 25 gpm (95 L/min)

(Dimensional drawing on following page)

Delta reserves the right (1) to make changes to specifications and materials, and (2) to change or discontinue models, both without notice or obligation. Dimensions are for reference. Measurement may vary plus or minus 6mm(0.25"). Mounting locations are suggested only. Check with local codes for requirements in your area. This spec was produced June 16, 2021.

Delta Faucet Company - 55 East 111th St. - Indianapolis, Indiana, USA 46280 - (317) 848-1812
Delta Faucet Canada - 395 Matheson Blvd E - Mississauga, Ontario, Canada L4Z 2H2 - (905) 712-3030

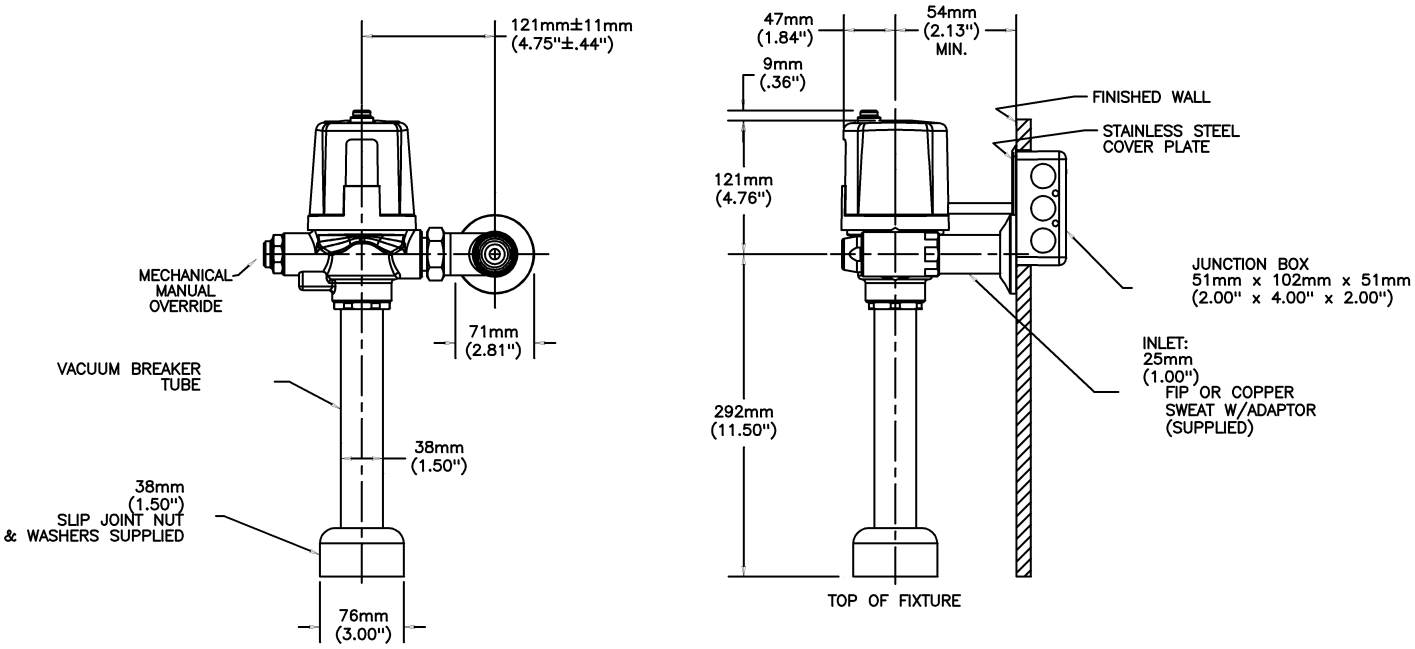

Delta reserves the right (1) to make changes to specifications and materials, and (2) to change or discontinue models, both without notice or obligation. Dimensions are for reference. Measurement may vary plus or minus 6mm(0.25"). Mounting locations are suggested only. Check with local codes for requirements in your area. This spec was produced June 16, 2021.

Delta Faucet Company - 55 East 111th St. - Indianapolis, Indiana, USA 46280 - (317) 848-1812
Delta Faucet Canada - 395 Matheson Blvd E - Mississauga, Ontario, Canada L4Z 2H2 - (905) 712-3030