California Faucets®

# Bel Canto®

## Single Hole Lavatory/Bar/Prep Faucet - High Spout

**E309-2**
**E309B-2**
**E309R-2**
**E309RB-2**

### Features

- *Available in 28 finishes including 13 PVD finishes*
- *All brass construction*
- *5-5/16" spout center to center*
- *Single handle operation cartridge with ceramic disk*
- *Flexible braided hoses for ease of installation*
- *1.2gpm (4.5 L/min) max flow rate*

*E309-2-SN shown*

*E309R-2-SN shown*

### Codes/Standards Applicable

Product meets or exceeds the following:

- *ASME A112.18.1/CSA B125.1*
- *NSF 61, NSF 372, CEC & DOE*
- *EPA WaterSense*
- *Commonwealth of MA*
- *ADA compliant*

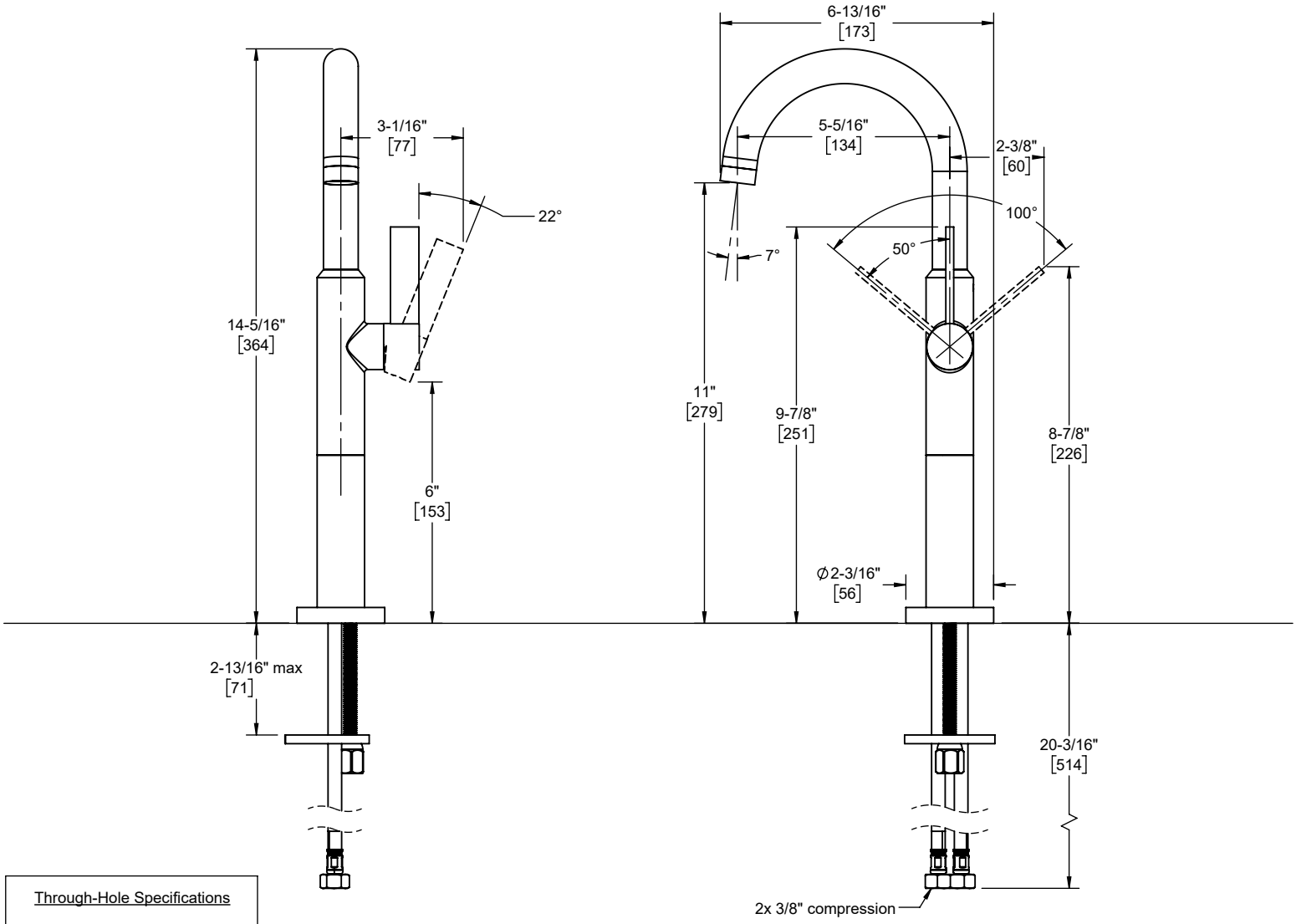


| Through-Hole Specifications | | |
|---|---|---|
| Min | Recommended | Max |
| Ø1-1/4" | Ø1-3/8" | Ø1-9/16" |
| [32] | [35] | [40] |

Specifications subject to change without notice

Dimensions are inches, rounded to 1/16"
[Dimensions in brackets are mm, rounded to 1mm]