KOHLER. Faucets

Graze®

Pull-down kitchen sink faucet with three-function sprayhead

K-22062

Features

- Three-function pull-down sprayhead with touch-control allows you to switch between stream, Sweep® spray and BerrySoft® spray
- Sweep® spray features specially angled nozzles that form a wide, powerful blade of water to sweep your dishes and sink clean
- BerrySoft® is a light spray ideal for washing hands, rinsing delicate dishware, and prepping fruits and vegetables
- ProMotion® technology's light, quiet braided hose and swiveling ball joint make the pull-down sprayhead easier and more comfortable to use
- High-arch 270˚ rotating swing spout offers vertical clearance for tall cookware and pitchers
- Swing spout provides greater coverage area in sink for easier food prep and cleanup
- 1.5 gpm (5.7 lpm) maximum flow rate at 60 psi (4.14 bar)
- Single lever handle makes adjusting water temperature easy.
- Temperature memory allows faucet to be turned on and off at the temperature set during prior usage
- MasterClean™ sprayface features an easy-to-clean surface that withstands mineral buildup and maximizes spray performance
- KOHLER® ceramic disc valves exceed industry longevity standards for a lifetime of durable performance
- DockNetik® secure docking system locks sprayhead into place when not in use

Material

- Premium metal construction for durability and reliability
- KOHLER finishes resist corrosion and tarnishing

Installation

- Deck-mount
- Single-hole installation (three-hole escutcheon sold separately)
- Flexible supply lines simplify installation

Adapters, Rough-in and Extension Kits

1012715	Range: 2-1/2" (64 mm) - 4-5/8" (118 mm)

Optional Products/Accessories

K-22071 Three-hole kitchen faucet escutcheon

ADA | **CSA B651**

Codes/Standards

ASME A112.18.1/CSA B125.1
NSF/ANSI/CAN 61
NSF/ANSI/CAN 372
DOE - Energy Policy Act 1992
California Energy Commission (CEC)
ADA
ICC/ANSI A117.1
CSA B651

KOHLER® Faucet Lifetime Limited Warranty

See website for detailed warranty information.

Available Colors/Finishes

Color tiles intended for reference only.

Color	Code	Description
	CP	Polished Chrome
	SN	Vibrant® Polished Nickel
	AF	Vibrant® French Gold
	VS	Vibrant® Stainless
	BV	Vibrant® Brushed Bronze
	BL	Matte Black
	2MB	Vibrant® Brushed Moderne Brass
	TT	Vibrant Titanium

KOHLER. Faucets

Graze®

Pull-down kitchen sink faucet with three-function sprayhead

K-22062

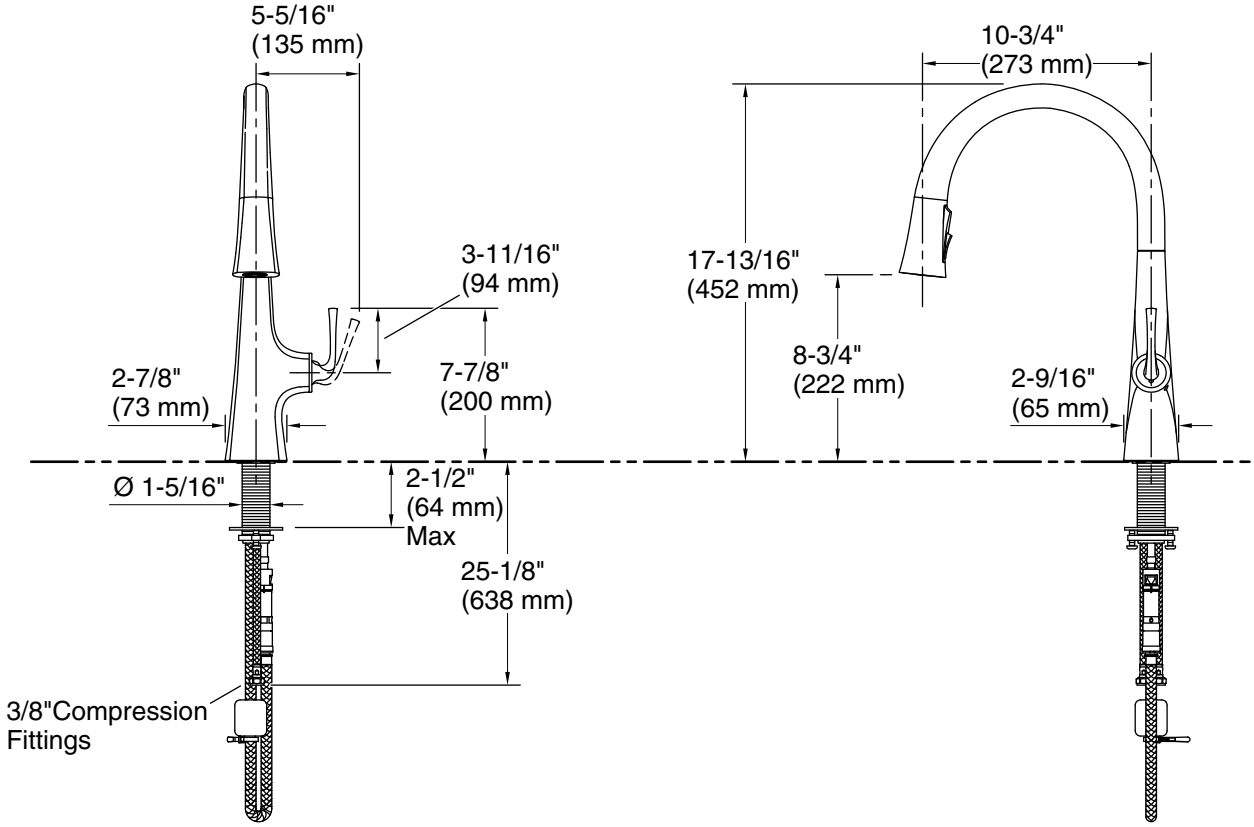

Technical Information

All product dimensions are nominal.

Faucet flow rate: 1.5 gal/min (5.7 l/min)

Spout:

Spout reach: 10-3/4" (273 mm)

Notes

Install this product according to the installation instructions.

ADA complaint for faucet handles only.

ADA compliant for faucet handles only

ADA, CSA B651 compliant when installed to the specific requirements of these regulations.