Santa Rosa™

One-piece compact elongated toilet, 1.28 gpf

K-30810-RA

Features

- One-piece toilets integrate the tank and bowl into a seamless, easy-to-clean design
- Compact elongated bowl offers added comfort while occupying the same space as a round-front bowl
- Comfort Height® feature offers chair-height seating that makes sitting down and standing up easier for most adults
- 1.28 gpf (4.8 lpf)
- Right-hand Polished Chrome trip lever
- 2-1/8" (54 mm) fully glazed trapway
- Revolution 360® flushing technology generates a forceful swirling motion to keep the bowl clean longer
- CleanCoat™ surface treatment inhibits the growth of water scale and mineral stains for improved ease of cleaning
- Precision-engineered tank, bowl, and trapway create strong siphon during flushing
- AquaPiston® canister optimizes the flow out of the tank, harnessing gravity and the natural, powerful reducing cascade of water to increase the power and effectiveness of the flush
- Easy-to-flush canister design requires less force to actuate than a 3" (76 mm) flapper, and has 90% less exposed seal material which resists conditions that cause wear, tear, shrinkage and swelling
- Includes tank, tank accessory pack, tank cover, trip lever, and bolt caps
- Brevia™ toilet seat included

Installation

- Standard 12" (305 mm) rough-in
- Supply line sold separately

Recommended Products/Accessories

K-8298 PureWash® E590 Elongated bidet toilet seat
K-5420 Low-Profile Bolt Caps
K-30919-R Right-hand trip lever

ADA	CSA B651	OBC

Codes/Standards

ASME A112.19.2/CSA B45.1
DOE - Energy Policy Act 1992
EPA WaterSense®
California Energy Commission (CEC)
ADA
ICC/ANSI A117.1
CSA B651
OBC

KOHLER® Toilets and Seats Limited Warranty

See website for detailed warranty information.

Available Colors/Finishes

Color tiles intended for reference only.

Color	Code	Description
	0	White
	96	Biscuit

Santa Rosa™

One-piece compact elongated toilet, 1.28 gpf

K-30810-RA

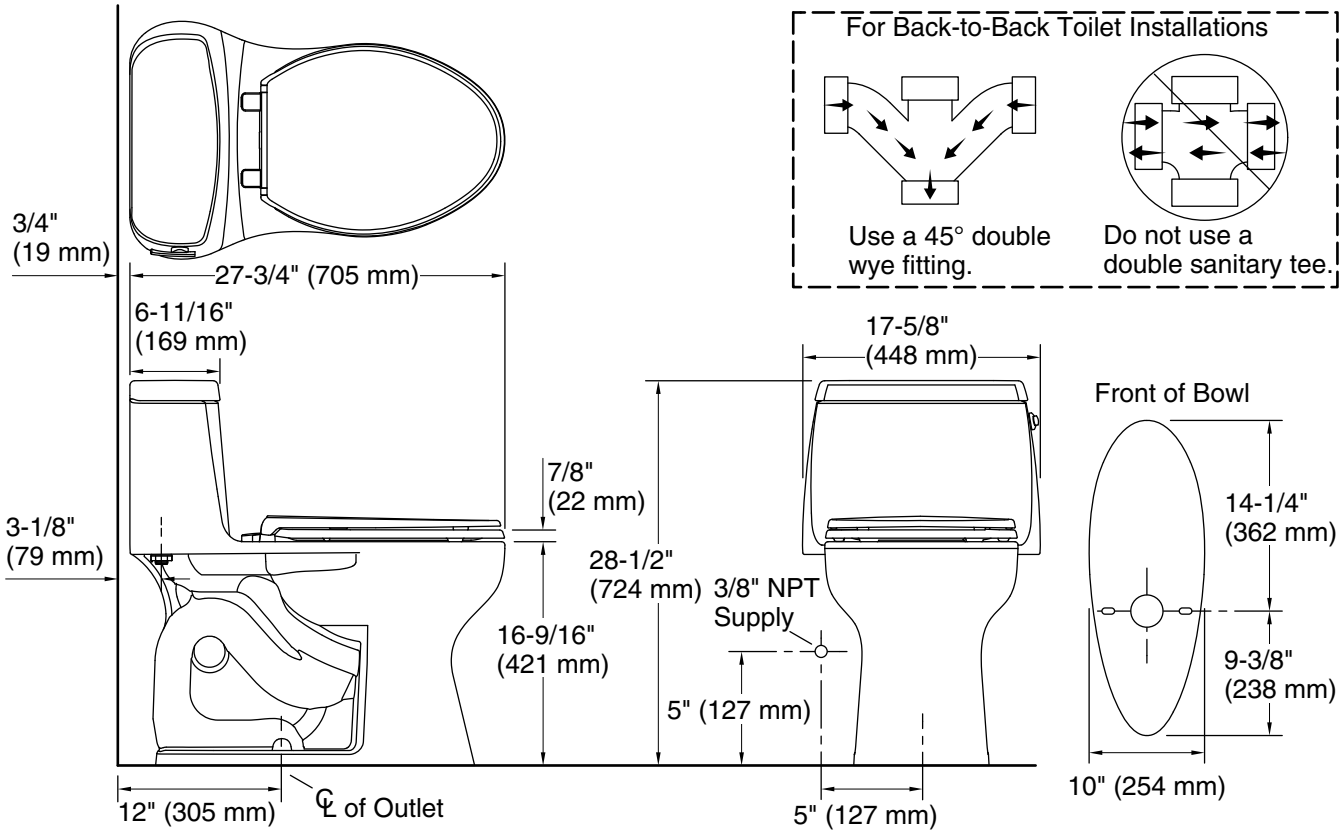

Technical Information

All product dimensions are nominal.

Toilet type:	Floor-mount
Waste Outlet:	Floor
Bowl shape:	Elongated
Flush type:	Revolution 360, AquaPiston
Trap passageway:	2" (51 mm)
Water surface size:	10" x 8" (254 mm x 203 mm)
Rim to water surface:	6-11/16" (170 mm)
Rough-in:	12" (305 mm)
Seat-mounting holes:	5-1/2" (140 mm)

Fixture Supply Requirements

Min static pressure:	20 psi (137.9 kPa)
Max static pressure:	80 psi (551.6 kPa)

Notes

Install this product according to the installation instructions.

Product dimensions are nominal and may vary per ASME A112.19.2 tolerances.

ADA, OBC, CSA B651 compliant when installed to the specific requirements of these regulations.

Plumbing codes may require elongated toilets and elongated, open-front seats in public bathrooms.

Accessibility standards may require controls to be located on the open side of the toilet.