KOHLER. Faucets

Elate®

Rite-Temp® shower trim kit with push-button diverter, 1.5 gpm

K-T35326-4H

Features

- Single-function 1.5 gpm (5.7 lpm) showerhead
- MasterClean™ sprayface features an easy-to-clean surface that withstands mineral buildup and maximizes spray performance
- A single handle controls both on/off activation and temperature setting
- Box includes: Showerhead, faceplate with lever handle and diverter, shower arm with flange
- Requires valve (sold separately)
- Coordinates with other products in the Elate collection
- This product can help a building earn Water Efficiency points in LEED® Green Building Rating System

Material

- Premium material construction with metal handle ensures reliability and durability
- KOHLER finishes resist corrosion and tarnishing

Required Products/Accessories

K-11748 Series Rite-Temp® Valves

WaterSense Meets EPA Criteria
Certified by IAPMO R&T

Codes/Standards

ASME A112.18.1/CSA B125.1
DOE - Energy Policy Act 1992
EPA WaterSense®
California Energy Commission (CEC)

KOHLER® Faucet Lifetime Limited Warranty

See website for detailed warranty information.

Available Colors/Finishes

Color tiles intended for reference only.

Color	Code	Description
	CP	Polished Chrome
	BN	Vibrant® Brushed Nickel
	BL	Matte Black
	2MB	Vibrant® Brushed Moderne Brass

KOHLER. Faucets

Elate®

Rite-Temp® shower trim kit with push-button diverter, 1.5 gpm

K-T35326-4H

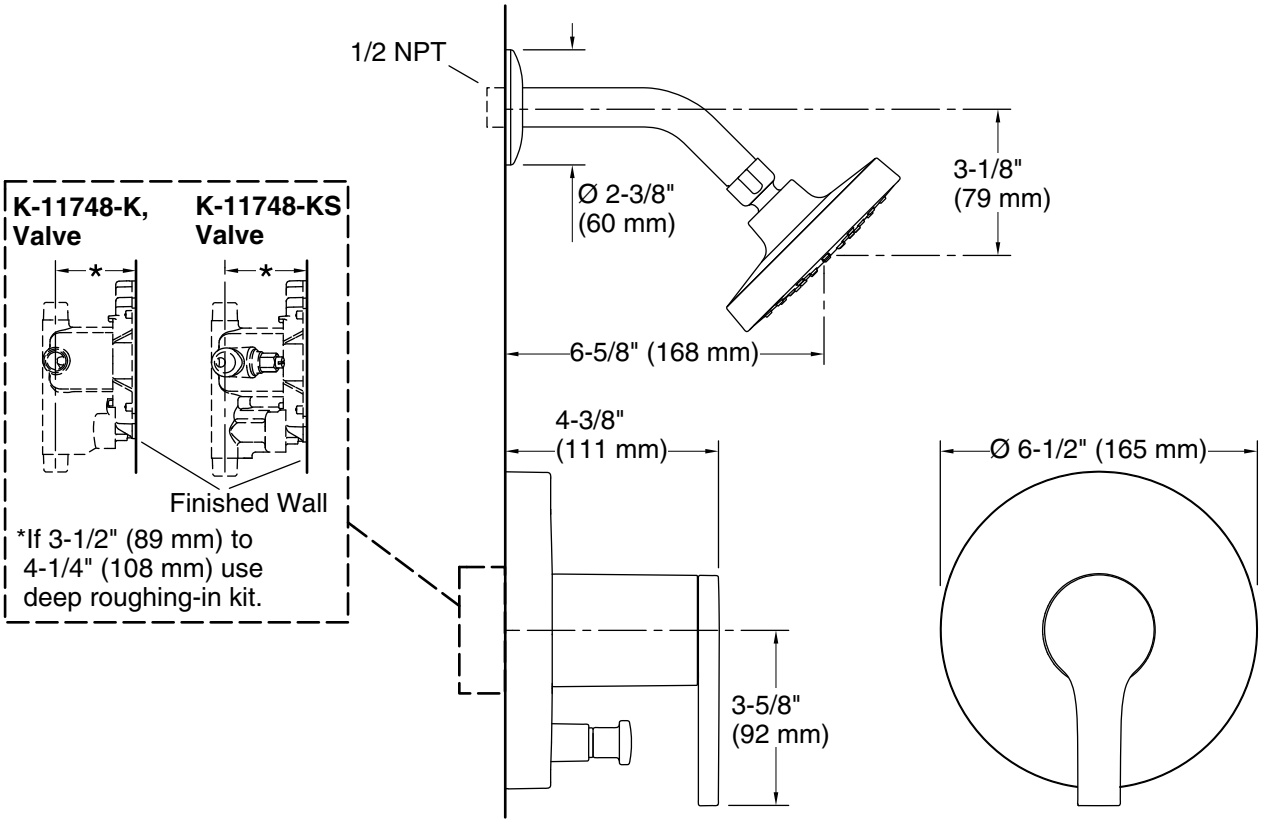

Technical Information

All product dimensions are nominal.

Spout:

Shower/Rainhead rated max flow: 1.5 gal/min (5.7 l/min)

Notes

Install this product according to the installation guide.

Avoid cross-flow conditions. Do not install a shut-off device on either valve outlet.

Install straight pipe or tube drop of 7" (178 mm) to 18" (457 mm) with single elbow between the valve and the wall-mount spout.