LACAVA®

Linea Vanity
Item #L426

Features:
-Wall-mount wooden vanity
-Consists of four drawers, metal frame, and solid surface countertop and three shelves
-Pulls matching the selected metal frame finish are included
-Washbasin#5452UN sold separately
-Handmade in USA
-Manufactured with low VOC finishes and wood from renewable forests

Recommended Accesories:
-Item #5452UN: Porcelain washbasin with overflow
-Recommended oversized European drain (i.e. item #7100-13OF or 7100-16OF)
-Available in White (-001) only

Countertop Finish Options:
G - Glossy Solid Surface
M - Matte Solid Surface

Faucet Hole Options:
00 - None
01 - One - centered behind the sink
02 - Two, center and right - centered behind the sink
03 - Three in 8" spread - centered behind the sink

Frame Finish Options:
10 - Polished Stainless Steel
21 - Brushed Stainless Steel
44 - Matte Black Stainless Steel
51 - Brushed Brass

Wood Finish Options:
02 - Natural Cherry
06 - Wenge
07 - Natural Walnut
08 - Matte White (TEX1 - fine texture)
16 - Matte Black (TEX1 - fine texture)
18 - Ebony
20 - Ash Gray
22 - Gray Zebra
24 - Classic Walnut
31 - White Oak
33 - African Mahogany
34 - Matte Mocha (TEX1 - fine texture)
35 - Matte Ardesia (TEX1 - fine texture)
36 - Espresso
37 - Weathered Oak
47 - Smoky Walnut
50 - Horizon Blue
52 - Silver Oak
85 - Gloss White
86 - Gloss Black
87 - Gloss Mocha
88 - Gloss Ardesia

Product Specifications:

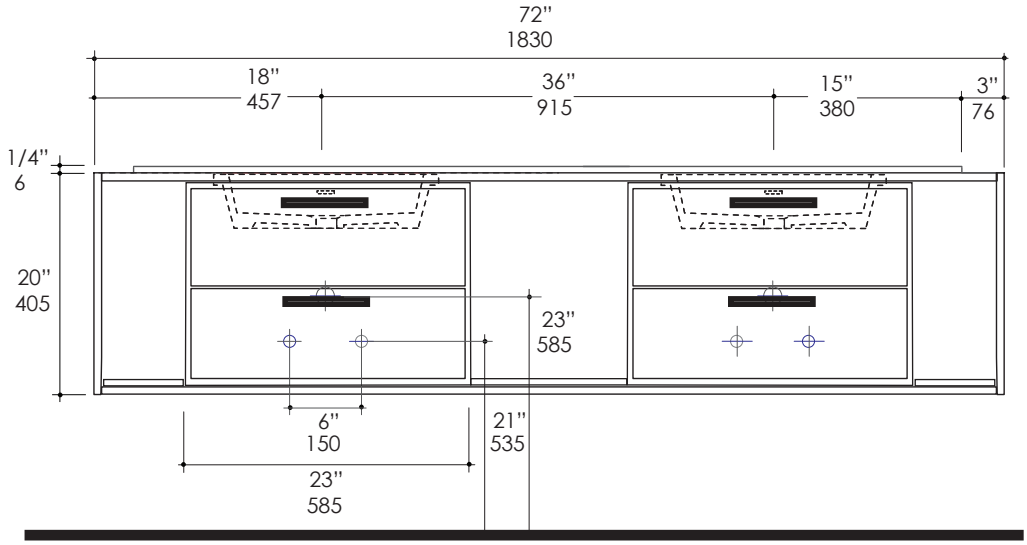

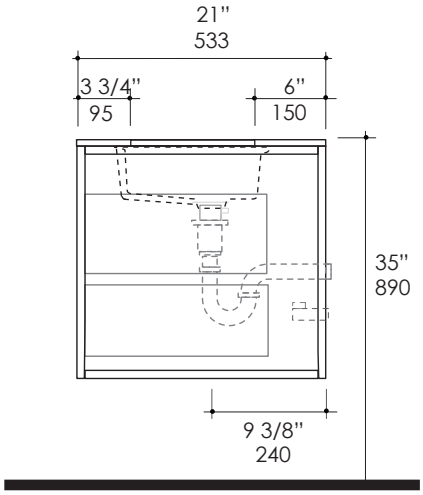

Notes:
Drawings provided herein are meant to give the user an idea of the product and are not made to scale. The size in inches is rounded up to the nearest 1/16". Slight variances can often occur with porcelain and woodwork. Therefore, LACAVA will not be held responsible for any cutouts, countertops, or furniture made without the actual product or template from LACAVA. Differences in color, grain, appearance and texture are inherent in all natural woodwork, and should be expected. Variances in these qualities are not deemed manufacturing defects, and will not be accepted as valid reasons to return or exchange any LACAVA woodwork. Plumbing specifications are only a guideline and may need to be altered based on the application.
Product specifications are not binding to the manufacturer and can be changed without notice at any time. Please refer to your shipment for product final sizes.

LACAVA is committed to the highest level of customer service. Please feel free to contact us at 1-888-522-2823 (toll free) or by email at info@lacava.com for technical assistance or any general inquiries.

Rev. 2-8-2018